Jamna Auto Industries Ltd.

November 11, 2016

National Stock Exchange of India Limited
Exchange Plaza,
Bandra Kurla Complex,
Bandra East,
Mumbai – 400 051

Company's Listing Code: JAMNAAUTO

Subject: **Presentation on financial results**

Dear Sir/Madam,

Pursuant to Clause 30 (2) read with Schedule III Part A of the Securities and Exchange Board of India (Listing Obligations and Disclosure Requirements) Regulations, 2015 please find attached herewith Presentation on financial results for Q2 FY 2016-17.

This is for your information and record.

Thanking you

Yours faithfully,

For **Jamna Auto Industries Limited**

Praveen Lakhera
Company Secretary & Head-Legal

Jamna Auto Industries Ltd.

Company Profile

2016-17

Jamna Auto Industries Ltd

Sales	**FY 2015-16 = INR 1,256 Cr** *Q-2 2016-17 = INR 275 Cr*
Market Capitalization	**INR 1,800 Cr** Approx. (Share Price INR 230.8/- as on 30.10.16)
Production Spring Capacity	**Existing – 180,000 MT** 3rd in the World
Alliance	**Ridewell (USA) – Air Suspension & Lift Axle**
Manufacturing Plants	**8 Plants in 6 States**
Listed on Stock Exchanges	**BSE – 520051** **NSE – JAMNAAUTO**

Global Spring Manufacturers

Indian Market Scenario

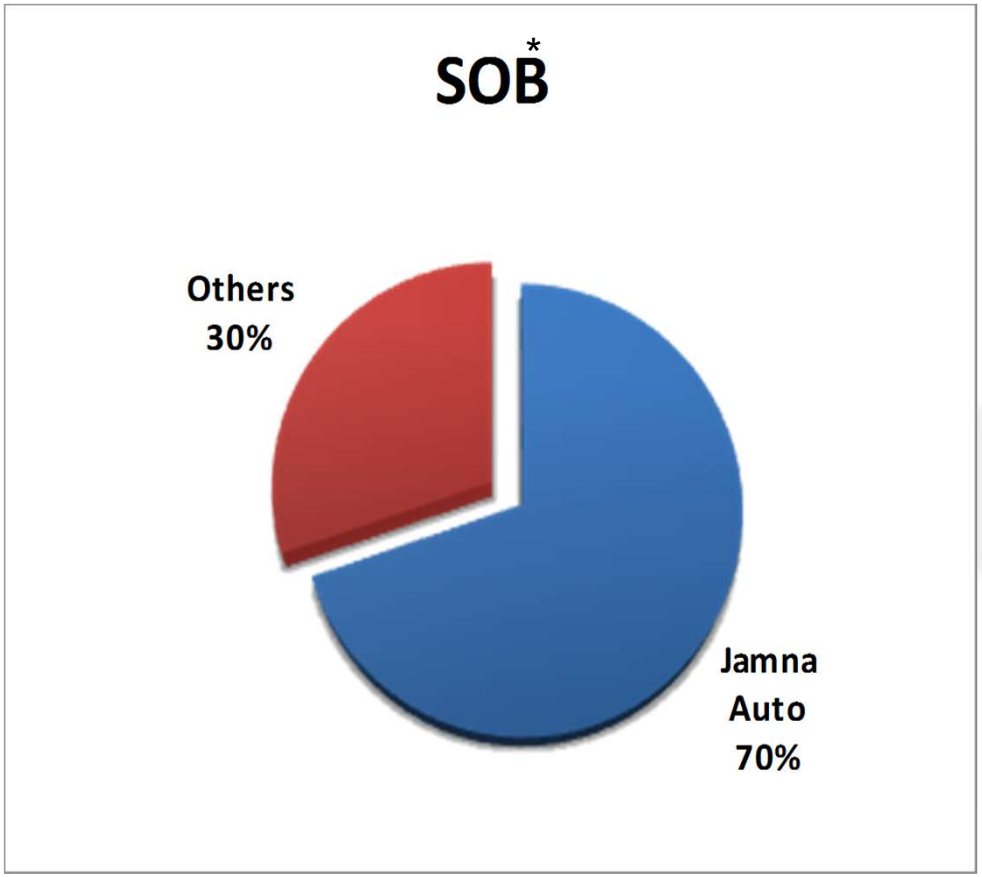

Note-The data as shown above is for Q2- 2016-17

Data Source- Internal

* SOB-Share of business

Global Leaf Market Scale

1980's

Leaf Spring Manufacturer	Base Country	Capacity
NHK Spring Co. Ltd.	Japan	*2,00,000*
Delphi	USA	*1,00,000*
Eaton/Oxford	Canada	*1,00,000*
Krupp	Germany	*40,000*
Hendrickson	USA	*40,000*
DSP	USA	*40,000*
Rejna	Europe	*40,000*
Hoesh	Germany	*30,000*
Sarfedern	Germany	*20,000*
Johns Woodhead	UK	*10,000*

Current

Leaf Spring Manufacturer	Base Country	Capacity
Rassini	Mexico	2,50,000
Hendrickson	Canada & Mexico	1,90,000
Jamna Auto Industries Ltd.	**India**	**1,80,000**
NHK Springs Co. Ltd.	Japan & Thailand	1,50,000
Ventanna	Europe	1,10,000
Dong Feng	China	1,05,000
FAW	China	1,00,000
MBHA	Spain	36,000
Olgin	Turkey	28,000
LPDN	Europe	24,000

Capacity in Tons per Annum

Shareholding Pattern

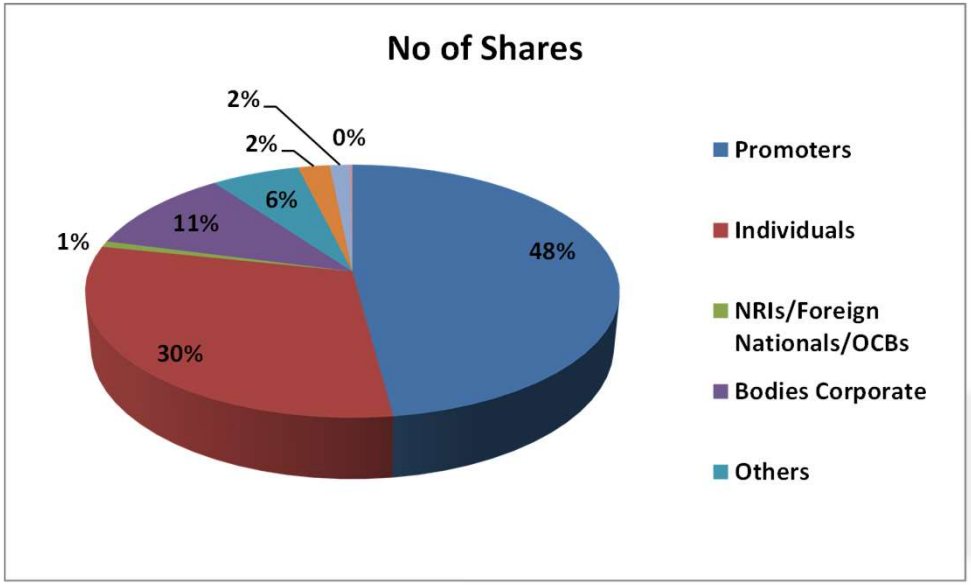

Category	No of shares	Percentage
Promoters	38,154,630	48%
Individuals	24,204,317	32%
NRIs/Foreign Nationals/OCBs	612,861	7%
Bodies Corporate	8,668,782	6%
Others	4947109	4%
FIIs	1,784,370	2%
Mutual Funds/UTI	1,131,928	0.8%
Financial Institutions/Banks	132,379	0.2%
Total	**79,636,376**	**100%**

Note- The Shareholding Pattern shown above is as on September 30, 2016

Our Strengths

- OEM Market Share 70%
- Manufacturing more than 460 Parts for OEMs
- Industry Leader in India - nearest competitor with little Market Share
- Strategically located all over India
- Q-2 FY17 Sales INR 275 Cr & Installed Capacity 180,000 MT p.a.

Products

Conventional Leaf spring

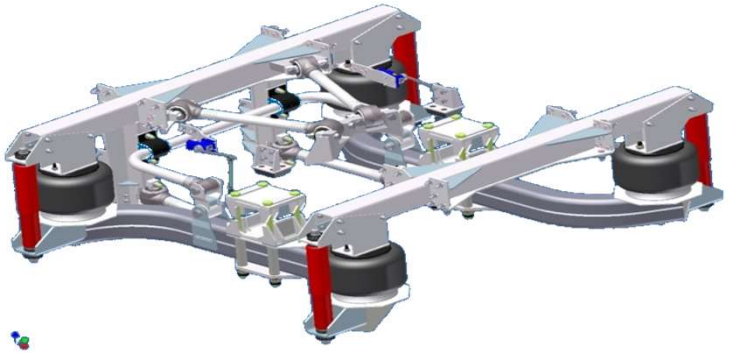

Air Suspension

Parabolic Leaf Spring

Lift Axle

Presence

Locations

Main Plants

- Yamuna Nagar
- Malanpur
- Chennai:
  - Maraimalai Nagar (Leaf Spring)
  - Pillaipakkam (Lift Axle)
- Jamshedpur
- Pune (Plant & R&D Centre)

Assembly Plants

- Pant Nagar
- Hosur

8 Locations

Products

- Leaf Spring
- Parabolic Spring
- Lift Axle
- Air Suspension

4 Products

Markets

- OE India
- AM India
- OE – Exports
- AM – Exports

4 Markets

* OE India- Original Equipment Manufacturer
* AM India – After Market India

Serving more than 20 OEM Customer Locations in India

Customers

AMW
THE GLOBAL TRUCK

Ashok Leyland

ASHOK LEYLAND
NISSAN

BHARATBENZ

ISUZU
Your responsible partner

KAMAZ
VECTRA

MAN

RENAULT NISSAN

SML
ISUZU

TATA

UD
UD TRUCKS

VE COMMERCIAL VEHICLES
A VOLVO GROUP AND EICHER MOTORS JOINT VENTURE

VOLVO

JAI &OEMs Presence in India

OEM Plants
JAI Existing Plants

Ropar
SML Isuzu

Alwar
Ashok Leyland

Indore
1. VECV
2. MTI

Pithampur
1. Force Motors

Bhuj AMW

Pune
TATA Motors
Mahindra

Bangalore
1. VOVLO
2. Ashok Leyland (Hosur)
3. Kamaz Vectra (Hosur)
4. Leyland Nissan (Hosur)
5. Scania

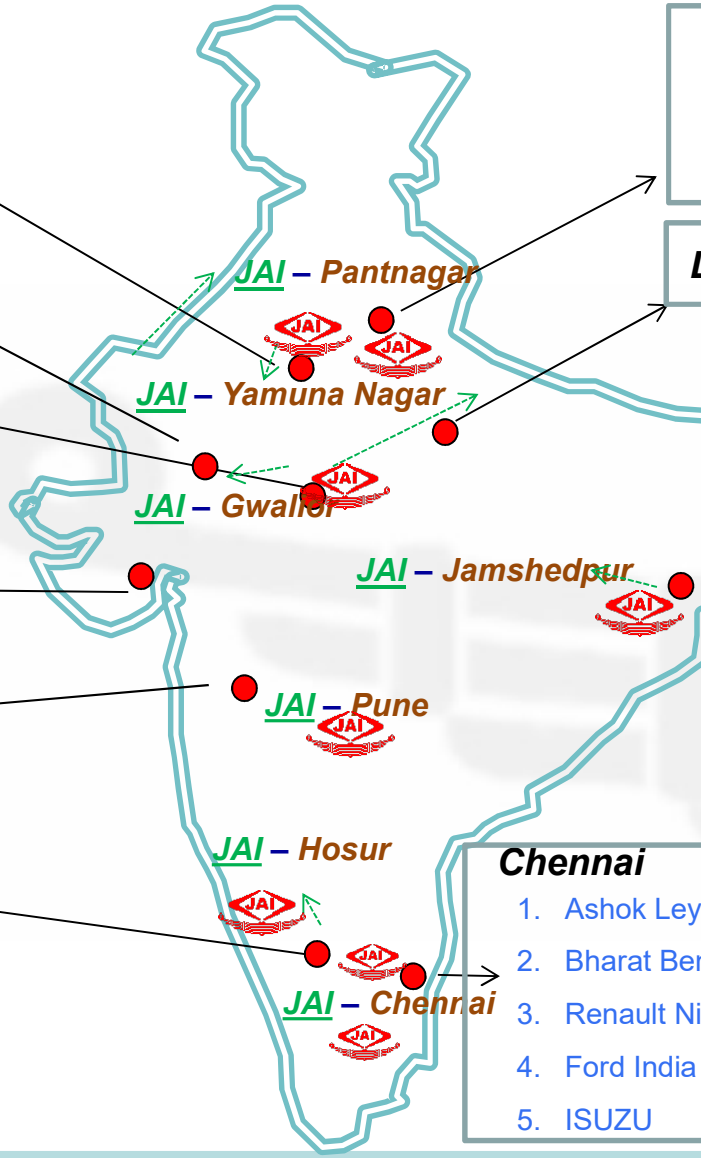

Pant Nagar
1. TATA Motors
2. Ashok Leyland

Lucknow TATA Motors

Jamshedpur TATA Motors

Chennai
1. Ashok Leyland (Ennore)
2. Bharat Benz (Daimler)
3. Renault Nissan
4. Ford India
5. ISUZU

Project Lakshya
Jai's medium term strategy focused on value creation

	Product Derisking	Diversifying Markets	Maximizing Efficiency
Operational Goals	**33% Revenue from New Products**	**33% Revenue from New Markets**	**33% Break Even Point**
Financial Goals	**33% ROCE**	**33% Dividend Payout**	**Net Block to be funded by Net Worth**

Jamna Auto Industries Ltd

Q2 Update

2016-17

Financial Results – Q2 FY'17

INR in Cr

	2015-16 12m	2015-16 Q2	2016-17 Q2	2016-17 Q1	Growth* in %	2016-17 H1
Net Sales	**1,255.8**	**317.7**	**275.3**	**335.1**	-13%	**610.4**
Export Sales	**10.8**	**2.7**	**3.9**	**2.5**	44%	**6.4**
EBITDA	**164.9**	**37.7**	**40.4**	**58.3**	7%	**98.6**
Operating Margin	**119.7**	**26.0**	**29.2**	**40.9**	13%	**70.1**
PBT	**105.0**	**22.2**	**26.9**	**39.4**	21%	**66.3**
PAT	**71.5**	**15.3**	**21.0**	**27.4**	37%	**48.4**
Cash Accruals	**116.7**	**27.1**	**32.2**	**44.8**	19%	**76.9**
EBITDA Margin (%)	**13.1%**	**11.9%**	**14.7%**	**17.4%**	23%	**16.2%**
Operating Margin (%)	**9.5%**	**8.2%**	**10.6%**	**12.2%**	30%	**11.5%**
PBT (%)	**8.4%**	**7.0%**	**9.8%**	**11.8%**	40%	**10.9%**
PAT (%)	**5.7%**	**4.8%**	**7.6%**	**8.2%**	58%	**7.9%**
Cash Accruals	**9.3%**	**8.5%**	**11.7%**	**13.4%**	37%	**12.6%**

Cash Accruals- PAT + Depreciation

** Growth over Q2 of 2015-16*

Financial Results – Q2 FY'17

- **Sales** — Decreased by **13%, SOB** Increased by **2%**
- **EBIDTA** — **14.7%** in the quarter
- **Dividend** — Declared Interim **Dividend** of INR 1.50/share (Face Value Rs.5/-)
- **ROCE** — Improved ROCE to **39%** -maintaining LAKSHAY target
- **NW=NB** — Capital expenditure met out of **internal** cash generation
- **Expansion** — Commercial production to start by Dec. at **Hosur** plant
  Plant in **Lucknow** being set up
  Plant in **Indore** being planned
  Product expansion into **Stabilizer Bar** approved

NW – Net Worth; NB – Net Block

Financial Highlights – Q2 FY'17

❑ Credit Ratings by ICRA: Updated Nov. 16

- Long Term Rating **AA-**
- Short Term Rating **A1+**
- Commercial Paper Rating (Provisional) **A1+**

❑ Healthy Liquidity:

As on 30.09.16	* INR in Cr
Unutilized Working Capital Limits (PO Finance & Cash Credit)	27
Unutilized VFS Limits	106
Cash Balance	10
Total available	**143**

VFS – Vendor Finance Scheme ** Rounded off*

CV Industry & JAI's Journey

	Q-2 2015-16	Q-2 2016-17	Growth in Q-2
OEMs - Total Commercial Vehicle Prod. (Nos.)	1,98,951	1,94,221	-2.4%
OEMs - H & MCVs Prod. (Nos.)	92,571	79,32	-14%
OEMs - LVCs Prod. (Nos.)	1,06,380	1,14,892	-8%
JAI 's Net Sale (INR in Crore)	318	275	-13%
JAI's Market Share (%)	68	70	2%

*Vehicle Production information source : **SIAM (i.e adjusted for Diamler India Commercial Vehicles Ltd-DICV)***

Borrowing Trend

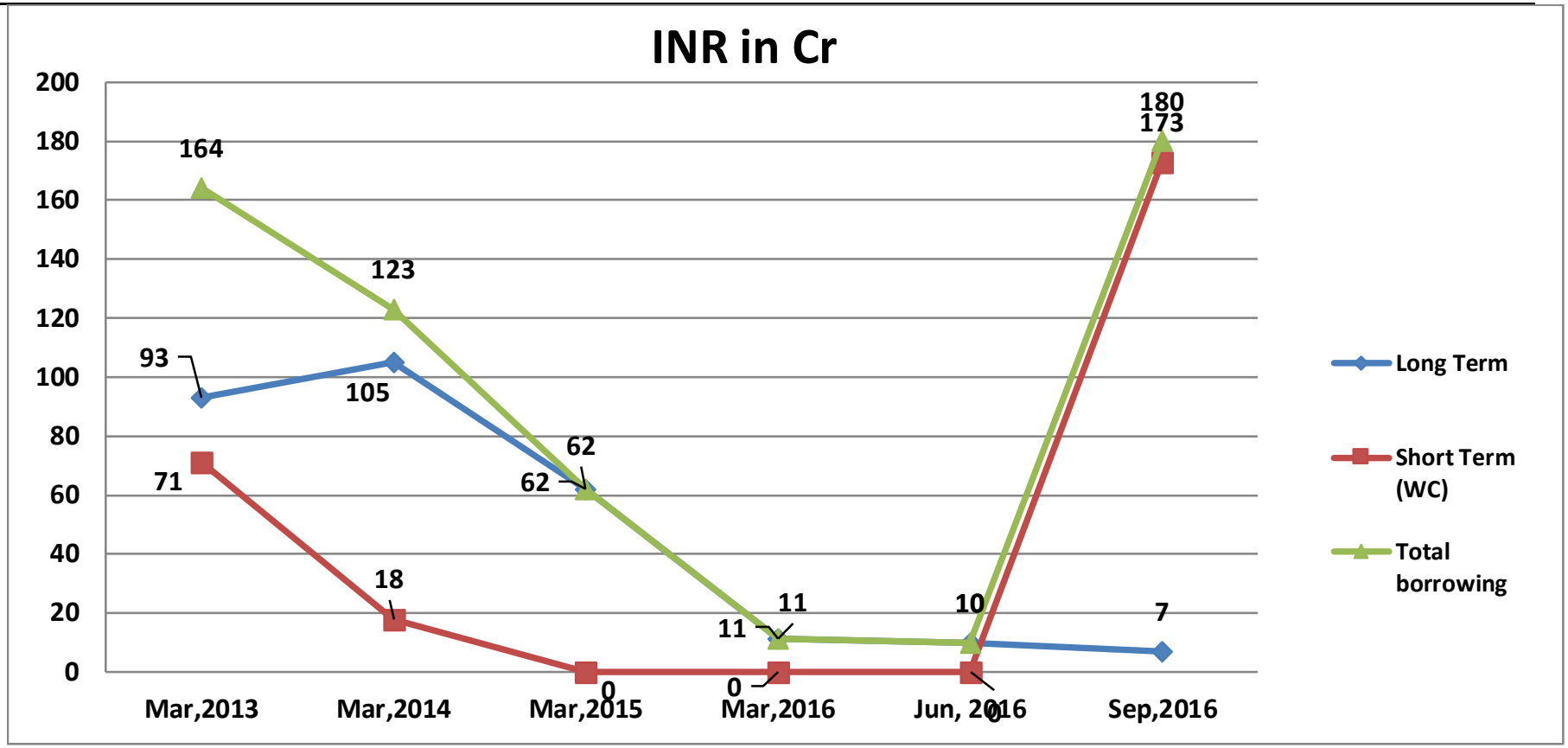

- Increase is borrowing is on account of conversion of LCs (Non Fund Based) into Vendor Financing (Fund based).
- The creditors and other liabilities have been reduced to that extent.

Thank You