Jamna Auto Industries Ltd.

November 15, 2019

To,
National Stock Exchange of India Limited
Exchange Plaza, Plot no. C/1, G Block,
Bandra-Kurla Complex, Bandra (E)
Mumbai - 400 051, Maharashtra

NSE Code: JAMNAAUTO

Subject–Revised Presentation on the financial results for second quarter of Financial Year 2019-20

Dear Sir,

This is with reference to the presentation submitted on November 14, 2019 vide acknowledgement no. 2019/Nov/5161/5177 pertaining to the financial results for second quarter of Financial Year 2019-20.

We are enclosing herewith the revised presentation on the financial results for second quarter of Financial Year 2019-20. Kindly take the same on records.

Thanking you,

Yours faithfully,

For Jamna Auto Industries Limited

JAMNA AUTO INDUSTRIES LIMITED NEW DELHI

Praveen Lakhera
Company Secretary & Head-Legal

Encl: As above

Jamna Auto Industries Ltd.

Investors' Presentation
Q2 FY'20

Company Overview

JAI at a glance

India's #1
Spring Manufacturer

9
Strategically located plants across India

Rated **A1+/AA-** by ICRA

Manufacture ~ **500** Parts for OEMs & **2,000+** parts for After Market

Strong After Market network: More than **16,000** touch points

In-house R&D Centre

Jamna Auto Industries Limited is referred to as "JAI" hereafter

JAI's Corporate Strategy : Growth and Diversification

Expand Locations

Manufacturing Plants

- Yamuna Nagar
- Malanpur
- Chennai 1- Leaf Spring
- Chennai 2- Suspension
- Jamshedpur
- Pune
- Hosur

Assembly Plants

- Lucknow*
- Pant Nagar*

New Locations

- *Indore*
- *Adityapur**

**Under subsidiaries of Jamna*

Diversify Products

Existing Products

- **Leaf Spring**
- **Parabolic Spring**
- **Lift Axle**
- **Air Suspension**

Products in the pipeline

- ***Stabilizer Bar***
- ***U Bolt***
- ***Z Springs***
- ***Trailer Suspension***

De-risk Markets

Existing Markets

- **OE India**
- **AM India**
- **AM Exports**
- **OE Exports**

Key Strengths

Team of expert, innovative, self driven people	**Best in class manufacturing facilities**
Largest Supplier to Tata, Leyland & Daimler	**Prudent financial management policies**

JAI's Corporate Strategy: Lakshya

	Operational Goals		Financial Goals	
	Product De-risking	Diversifying Markets	Maximizing Returns	Value Creation
GOALS	33% Revenue from New Products	33% Revenue from New Market	33% ROCE	33% Dividend Payout
ACHIEVED FY'19	34% Revenue from New Products	16% Revenue from New Market	55% ROCE	33% Dividend* Payout

**9th consecutive year of dividend payout*

JAI's OEM Customers

AMW
BUILT TO WIN

Ashok Leyland

BHARATBENZ

FORCE
MOTORS

GM

ISUZU
Your responsible partner

MAN

SML
ISUZU

TATA

TOYOTA

UD TRUCKS

VOLVO

VE COMMERCIAL VEHICLES
A VOLVO GROUP AND EICHER MOTORS JOINT VENTURE

JAI's Product Portfolio

Existing Products

Conventional Leaf Spring

Parabolic Leaf Spring

Lift Axle

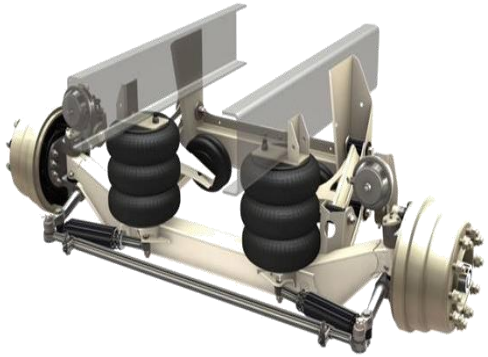

Air Suspension

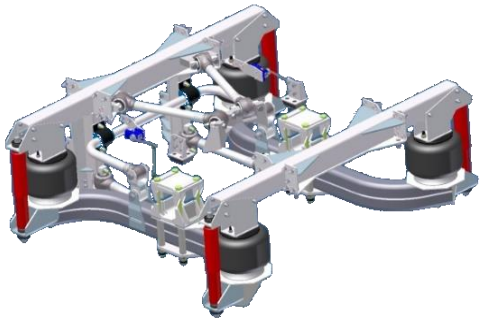

Upcoming Products

Stabilizer Bar

U Bolt

Z Spring

Trailer Suspension

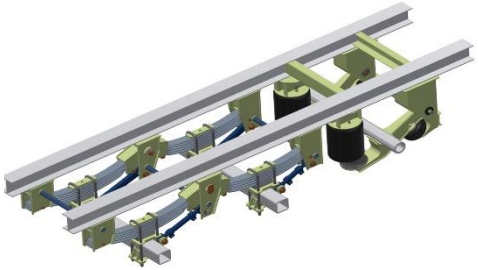

JAI's Plants: Strategically located across CV hubs

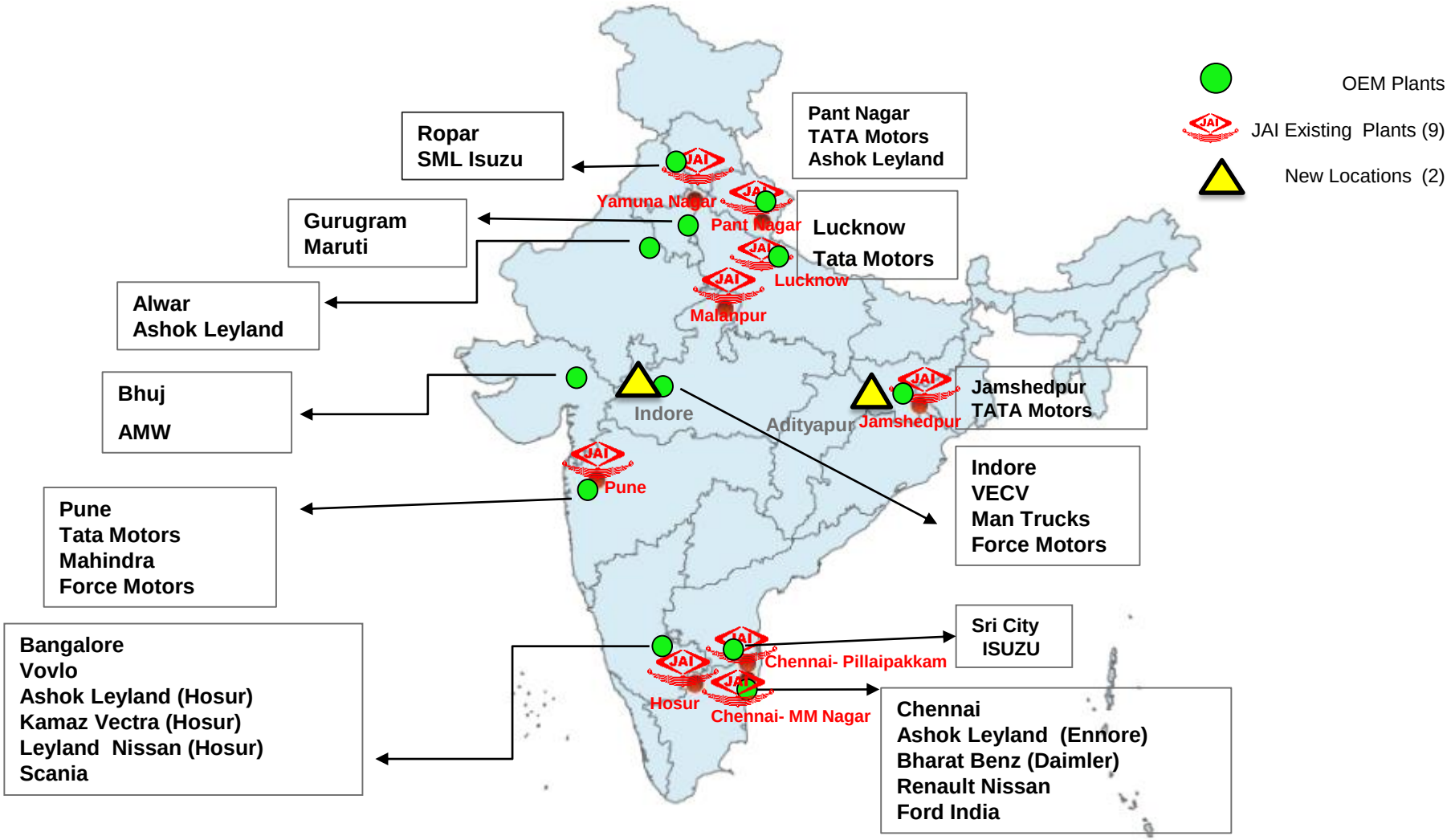

Map Source: as available on www.surveyofindia.gov.in dated 17.02.2017
The Map is for illustrative purpose only

Shareholding Pattern as on Sept 30, 2019

Category Wise Breakup

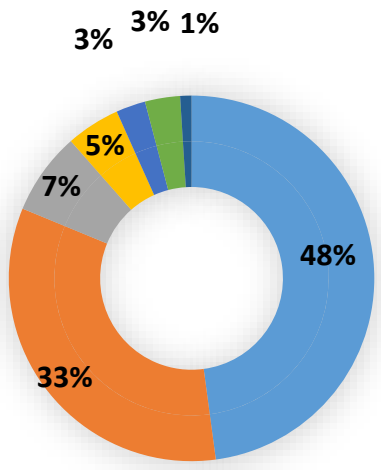

- Promoters
- Individuals
- Mutual Funds
- Foreign Portfolio Investors
- Bodies Corporate
- Financial Institution & Others
- NRIs

Categories	% Holding
Promoters	48%
Individuals	33%
Mutual Funds	7%
Foreign Portfolio Investors	5%
Bodies Corporate	3%
Financial Institution & Others	3%
NRIs	1%
Total	**100%**

Industry Highlights

Industry Highlights

- Global economic activity has weakened further, according to World Economic Outlook Update, October 2019.

- According to RBI's Monetary Policy Report (October 2019),India's GDP growth is projected at 6.1% in 2019-20, 5.3% in Q2; with a slight improvement in Q3 and Q4 at 6.6% and 7.2% respectively.

- CV Sector impacted by demand slowdown because of weak sentiment in Indian industry, liquidity stress, inventory liquidation by OEMs due to BS VI.

- M&HCV production declined by 56% YoY in Q2'20.

CV Industry Outlook

Decline in the CV Industry

- Total CV production declined by 39% YoY
- M&HCV production saw a decline of 56% YoY

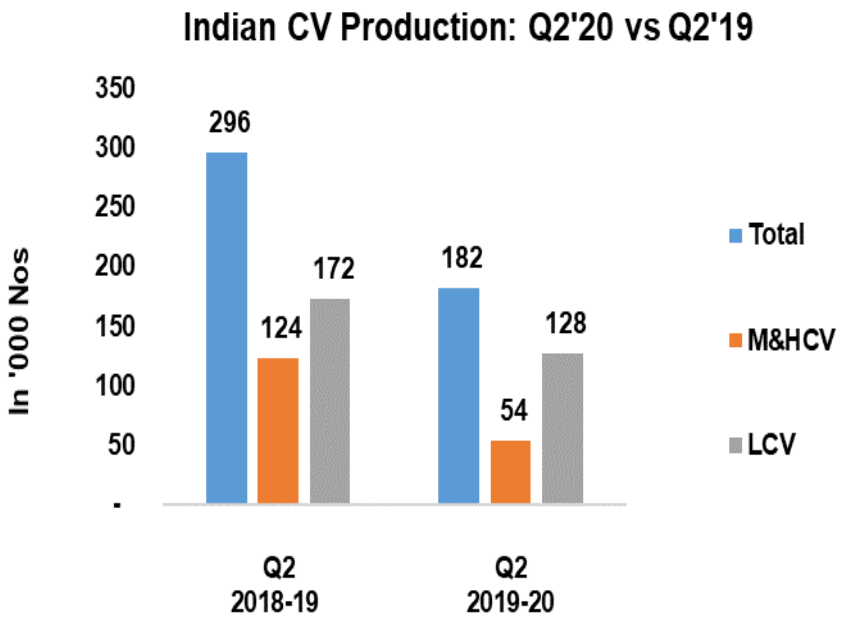

Data Source- SIAM + Internal

JAI's market share at 69% for the quarter

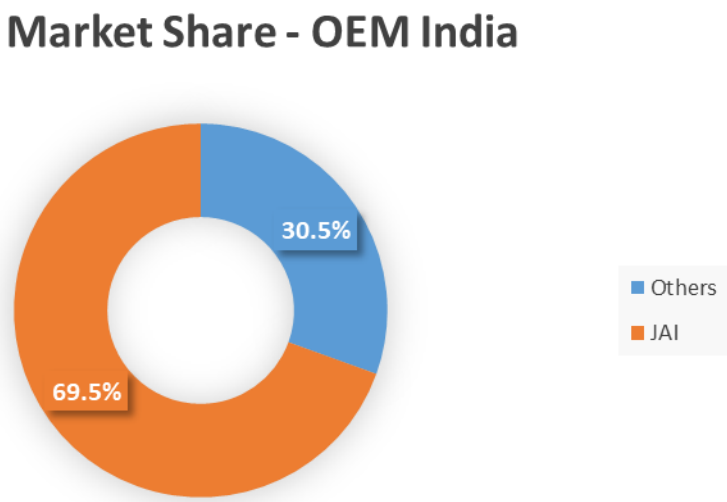

Data Source- Internal

Shift in Global Leaf Spring Market

1980's

Leaf Spring Manufacturer	Base Country	Capacity
NHK Spring Co. Ltd	Japan	200,000
Delphi	USA	100,000
Eaton/Oxford	Canada	100,000
Krupp	Germany	40,000
Hendrickson	USA	40,000
DSP	USA	40,000
Rejna	Europe	40,000
Hoesh	Germany	30,000
Sarfedern	Germany	20,000
Johns Woodhead	UK	10,000

JAI has come as the top spring manufacturer of the world for CV Industry

Current

Leaf Spring Manufacturer	Base Country	Capacity
Rassini	Mexico	250,000
Jamna Auto Industries Limited	**India**	**250,000**
Hendrickson	Canada & Mexico	216,000
NHK Spring Co. Ltd	Japan & Thailand	150,000
Dong Feng	China	105,000
FAW	China	100,000
MBHA	Spain	60,000
Olgen	Turkey	40,000
LPDN	Europe	26,500

Capacity in Tons per Annum

Financial Updates

Key Financial Trend : Q2 FY'20 Vs. Q2 FY'19

All Figures in Rupees Crore

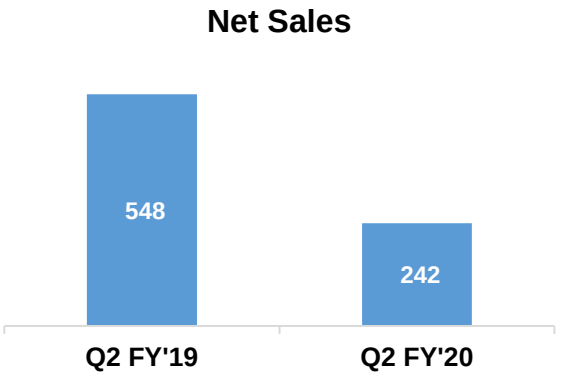

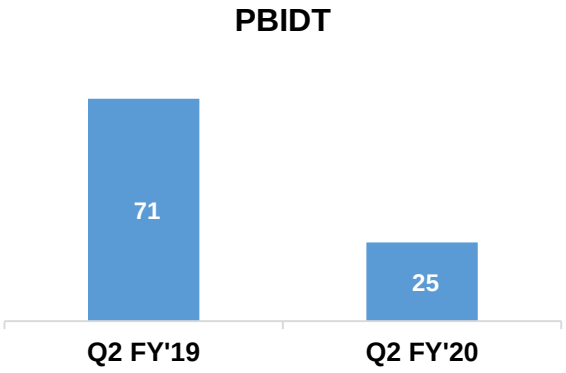

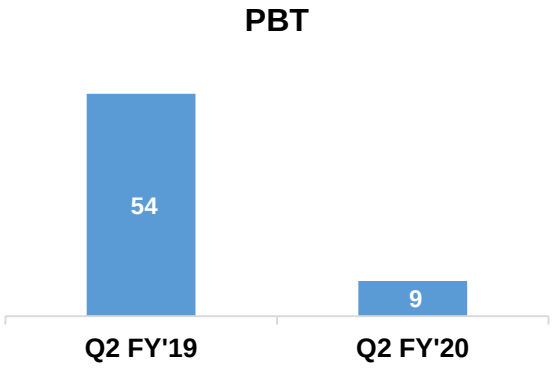

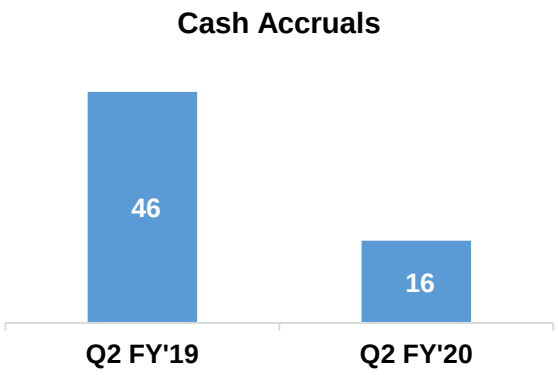

The drop in business is largely driven by lower Commercial Vehicle demand in this quarter.

Cash Accruals: PAT+ Depreciation

Financial Result – Q2 FY'20

All Figures in Rupees Crore

Revenue and Profitability Indicators`						
Particulars	2018-19	2019-20	2018-19	2019-20	% Growth	% Growth
	12M	Q2	Q2	Q1	Q2 FY'20 Vs Q2 FY'19	Q2 FY'20 Vs Q1 FY'20
Net Sales	2,135	242	548	421	-56%	-42%
PBIDT	287	25	71	47	-65%	-47%
Operating Margin	241	15	61	34	-75%	-55%
PBT	215	9	54	30	-84%	-71%
PAT	137	6	36	20	-82%	-69%
Cash Accruals	184	16	46	34	-64%	-51%
PBDITA Margin (%)	13%	10%	13%	11%		
Operating Margin (%)	11%	6%	11%	8%		
PBT (%)	10%	4%	10%	7%		
PAT (%)	6%	3%	6%	5%		
Cash Accruals (%)	9%	7%	8%	8%		

Cash Accruals: PAT+ Depreciation

Key Capital indicators		
Particulars	**Q2'20**	**Q1'20**
TOL/TNW	0.7	1.0
Debt to Equity	0.1	0.1
Average Cost of Borrowing	8.4%	8.5%

Contributing to the Society

CSR Achievements in Q2 FY'20:

Environment: Planted & gifted 17,760 saplings/seeds in all JAI locations.

Education: Improved basic facilities like construction of drinking water tank, toilets, floor, multipurpose hall, installation of water coolers, furniture, electrical etc. in adopted schools and colleges in Yamuna Nagar, Gurugram, Faridabad, Malanpur, Jamshedpur, Chennai & Kapurthala.

Sports: Pradeep Kumar, our sponsored wrestler from Jalandhar, Punjab won Gold medal in World Police Games-2019, held in China.

Community Service : 1049 community people were screened for oral and breast cancer while more than 3000 were sensitized about the same issue in collaboration with Yuvraj Singh Foundation in Delhi, Gurugram, Jamshedpur and Malanpur.

Distribution of saplings to Govt. school students in Malanpur, MP

Installation of water coolers in government school

Pradeep Kumar Punjab won Gold medal in World Police Games-2019

Cancer Screening at Delhi Office.

Forward Looking Statement

This presentation is made to enable investors to comprehend our prospects and take informed investment decisions. This presentation may contain certain forward looking statements within the meaning of applicable laws and regulations. We cannot guarantee that these forward-looking statements will be realized, although we believe we have been prudent in assumptions. The achievement of results is subject to risks, uncertainties and even inaccurate assumptions. Should known or unknown risks or uncertainties materialize, or should underlying assumptions prove inaccurate, actual results could vary materially from those anticipated, estimated or projected. Readers should bear this in mind. We undertake no obligation to publicly update any forward-looking statements, whether as a result of new information, future events or otherwise.

Thank You