Jamna Auto Industries Ltd.

August 11, 2018

To,
BSE Limited
Phiroze Jeejeebhoy Towers, Dalal Street,
Mumbai- 400001 Maharashtra

BSE Code: 520051

To,
National Stock Exchange of India Limited
Exchange Plaza, Plot no. C/1, G Block,
Bandra-Kurla Complex, Bandra (E)
Mumbai - 400 051, Maharashtra
NSE Code: JAMNAAUTO

Subject–Presentation on the financial results of first quarter of Financial Year 2018-19

Dear Sir,

Pursuant to the requirements of Regulation 30 and Regulation 46 of SEBI (Listing Obligations & Disclosure Requirements) Regulations, 2015, we are enclosing herewith the presentation by the Company pertaining to the financial results of first quarter of Financial Year 2018-19.

Kindly take the above information on record.

Thanking you,

Yours faithfully,

For Jamna Auto Industries Limited

Investor Relations Department

JAMNA AUTO INDUSTRIES LIMITED NEW DELHI

Encl: As above

Investors' Presentation
June'18

Future Ready for Growth…

Jamna Auto Industries Ltd.

Company Overview

JAI TODAY : Future Ready for Growth

India's #1

Spring Manufacturer

Capacity Readiness

Strategically located across India

Technological Competence

Collaboration with Ridewell Corporation, U.S. and Tinsley Bridge, U.K

Leading Product portfolio

Manufacturing ~ 500 Parts for OEMs & ~2000 parts for After Market

Strong Distribution Network

Largest After Market presence for springs in India

Innovation Readiness

Only Company with Spring R&D Centre in India

Jamna Auto Industries Limited is referred to as "JAI" hereafter

JAI's Transformational Journey

- ✓ Started business in 1954 with first spring manufacturing plant in Yamunanagar
- ✓ Revenue Growth of 12% (5 Year CAGR)

	FY 2014	FY 2018
Locations	**5**	**9**
Capacity	**180,000 MTPA***	**240,000 MTPA***
Revenue	**₹833 crore**	**₹1,738 crore**
Market Capitalization	**₹350 crore**	**₹3,500 crore**
Products	**Conventional & Parabolic Spring, Lift Axle & Air Suspension**	**Conventional & Parabolic Spring, Lift Axle & Air Suspension**

* MTPA refers to Metric Tons per Annum

JAI's Corporate Strategy : Growth and Diversification

Expand Locations

Manufacturing Plants

- Yamuna Nagar
- Malanpur
- Chennai 1- Leaf Spring
- Chennai 2- Suspension
- Jamshedpur
- Pune
- Hosur

Assembly Plants*

- Lucknow
- Pant Nagar

Upcoming Plants

- Indore
- Adityapur*

**Under subsidiaries of Jamna*

Diversify Products

Main Products

- Leaf Spring
- Parabolic Spring
- Lift Axle
- Air Suspension

Products in the pipeline

- Stabilizer Bar
- U Bolt
- Z Springs
- Trailer Suspension

De-risk Markets

Existing Markets

- OE India
- AM India
- AM Exports
- OE Exports

Key Strengths

- Team of expert, innovative, self driven people
- Best in class manufacturing facilities
- Marquee clientele & Strong distribution network
- Prudent financial management policies

JAI's Corporate Strategy : Project Lakshya

OPERATIONAL GOALS

PRODUCT DERISKING

33%
Revenue from New Products

DIVERSIFYING MARKETS

33%
Revenue from New Market

FINANCIAL GOALS

33%
ROCE

33%
Dividend Payout

Lakshya - JAI's Medium Term Strategy focused on **Value Creation**

JAI's Product Portfolio

Existing Products

1) Conventional Leaf Spring

2) Parabolic Leaf Spring

3) Lift Axle

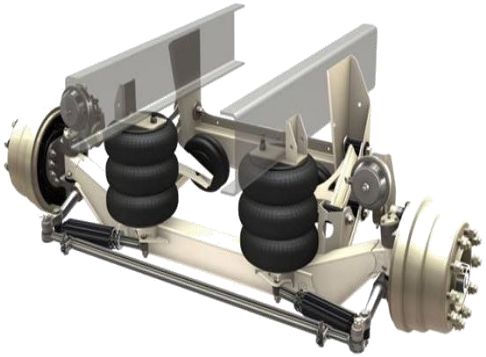

4) Air Suspension

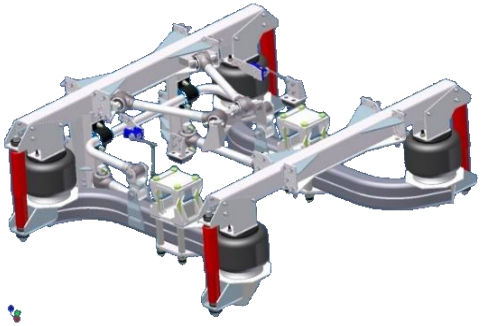

Upcoming Products

Stabilizer Bar

U Bolt

Z Spring

JAI's Plants: Strategically located across CV hubs

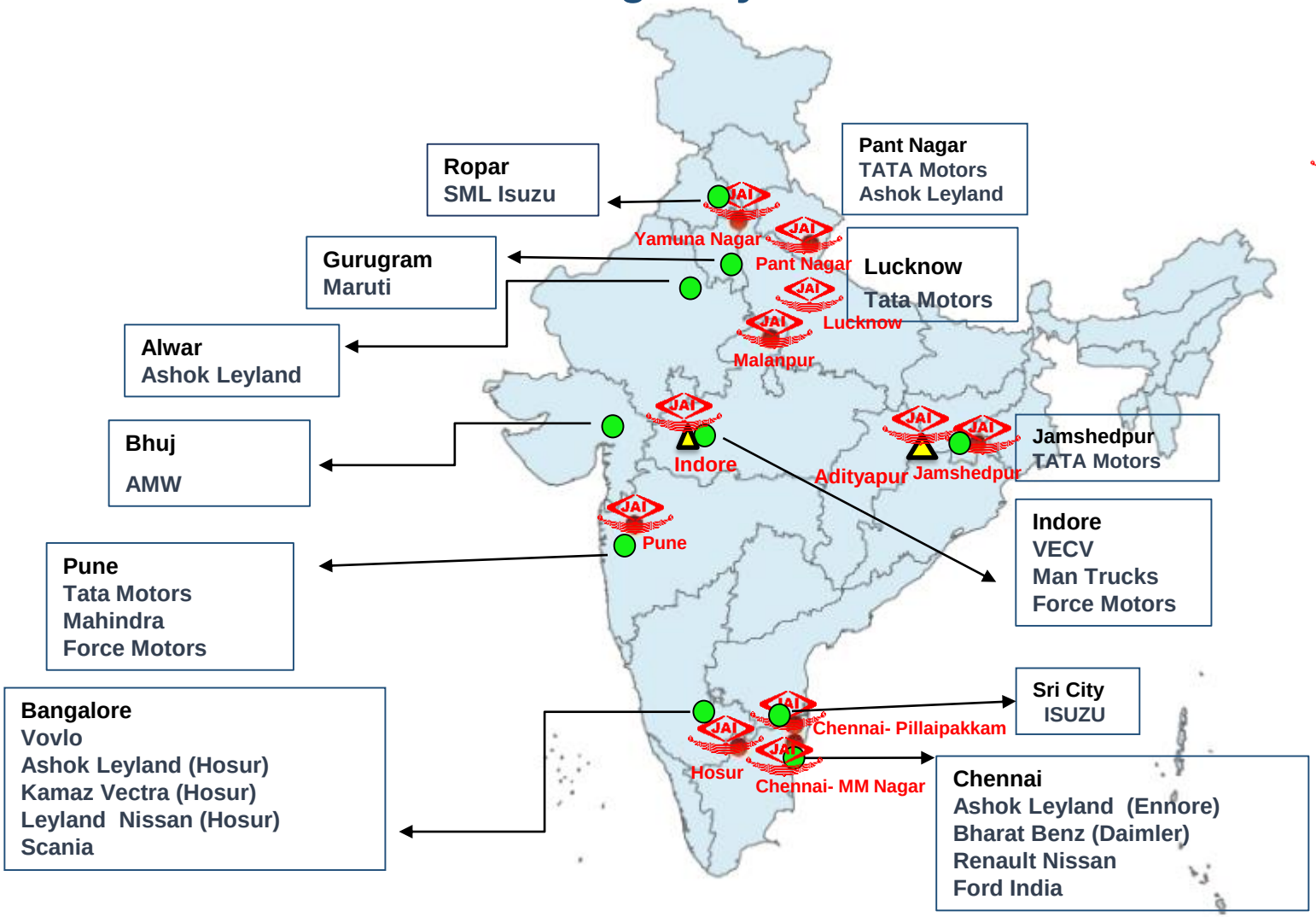

Map Source: as available on www.surveyofindia.gov.in dated 17.02.2017
The Map is for illustrative purpose only

JAI's OEM Customers

AMW
BUILT TO WIN

Ashok Leyland

BHARATBENZ

GM

ISUZU
Your responsible partner

KAMAZ
VECTRA

MAN

SML
ISUZU

TATA

TOYOTA

UD
UD TRUCKS

VOLVO

VE COMMERCIAL VEHICLES
A VOLVO GROUP AND EICHER MOTORS JOINT VENTURE

Shareholding Pattern as on June 30, 2018

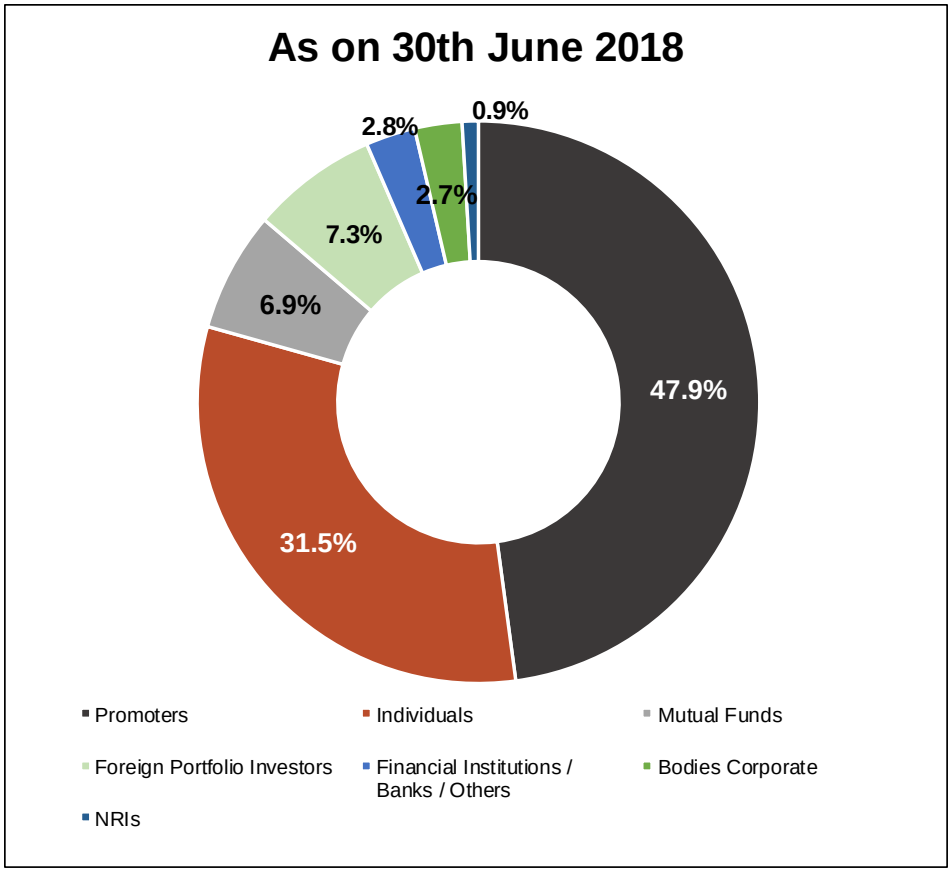

Category	No of shares	In %
Promoters	190,773,150	47.9
Individuals	125,359,555	31.5
Mutual Funds	27,474,172	6.9
FPIs & Others	28,958,516	7.3
Financial Institutions / Banks / Others	11,355,486	2.8
Bodies Corporate	10,832,419	2.7
NRIs	3,710,587	0.9
Total	**398,463,885**	**100**

Industry Highlights

Malanpur

CV Industry Highlights

Strong quarter for the CV Industry

- Total CV production grew by 67% YoY
- M&HCV production saw a jump of 112% YoY

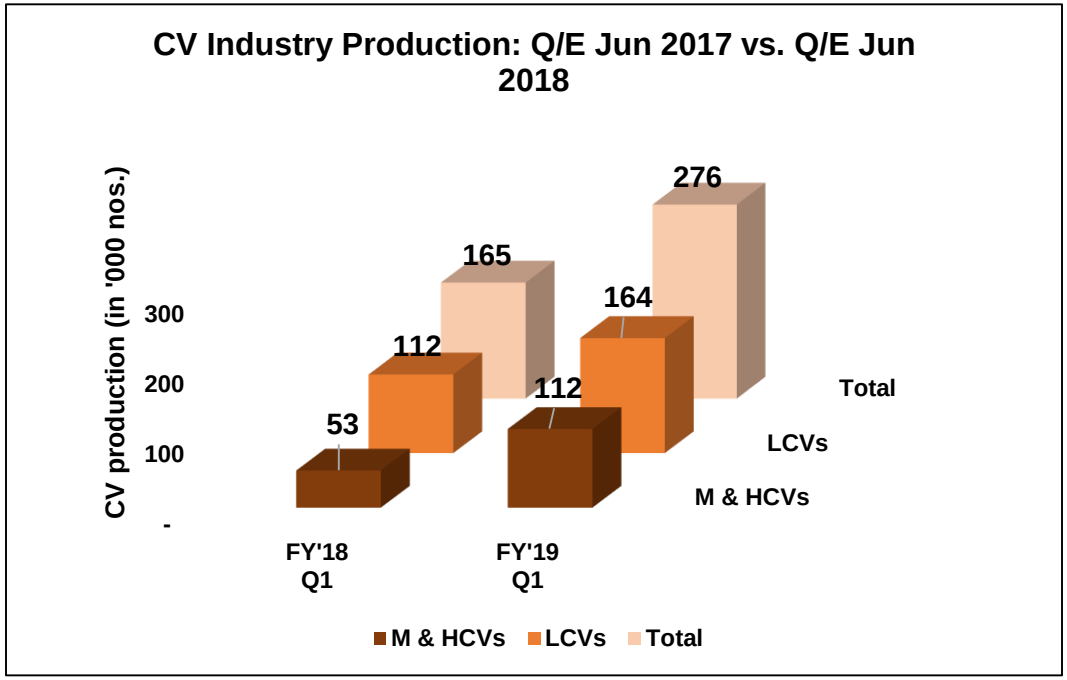

Data Source- SIAM + Internal

Indian Market Scenario

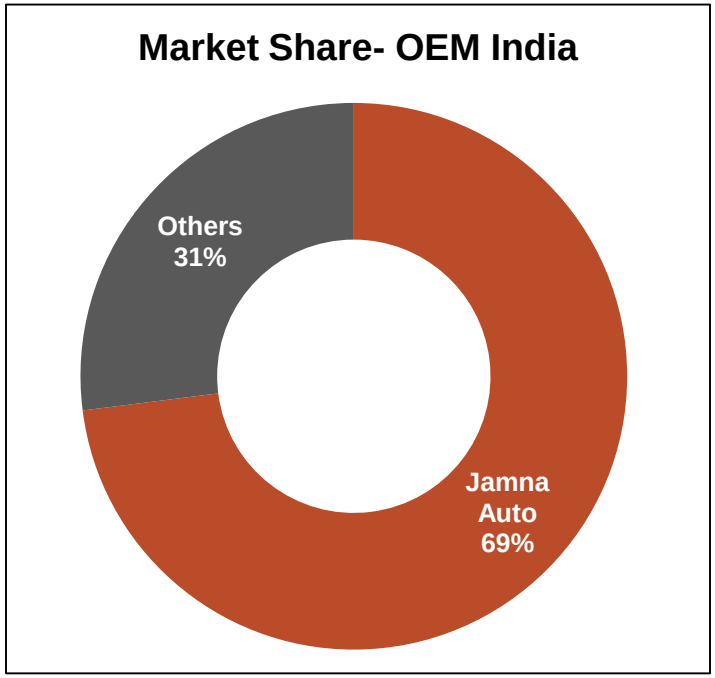

Data Source- Internal, Q1 Market Share in terms of Tons

Shift in Global Leaf Spring Market

1980's

Leaf Spring Manufacturer	Base Country	Capacity
NHK Spring Co. Ltd	Japan	200,000
Delphi	USA	100,000
Eaton/Oxford	Canada	100,000
Krupp	Germany	40,000
Hendrickson	USA	40,000
DSP	USA	40,000
Rejna	Europe	40,000
Hoesh	Germany	30,000
Sarfedern	Germany	20,000
Johns Woodhead	UK	10,000

Current

Leaf Spring Manufacturer	Base Country	Capacity
Rassini	Mexico	250,000
Jamna Auto Industries Ltd.	**India**	**240,000**
Hendrickson	Canada & Mexico	216,000
NHK Springs Co. Ltd.	Japan & Thailand	150,000
Dong Feng	China	105,000
FAW	China	100,000
MBHA	Spain	60,000
Olgen	Turkey	40,000
LPDN	Europe	26,500

Capacity in Tons per Annum

Financial Updates

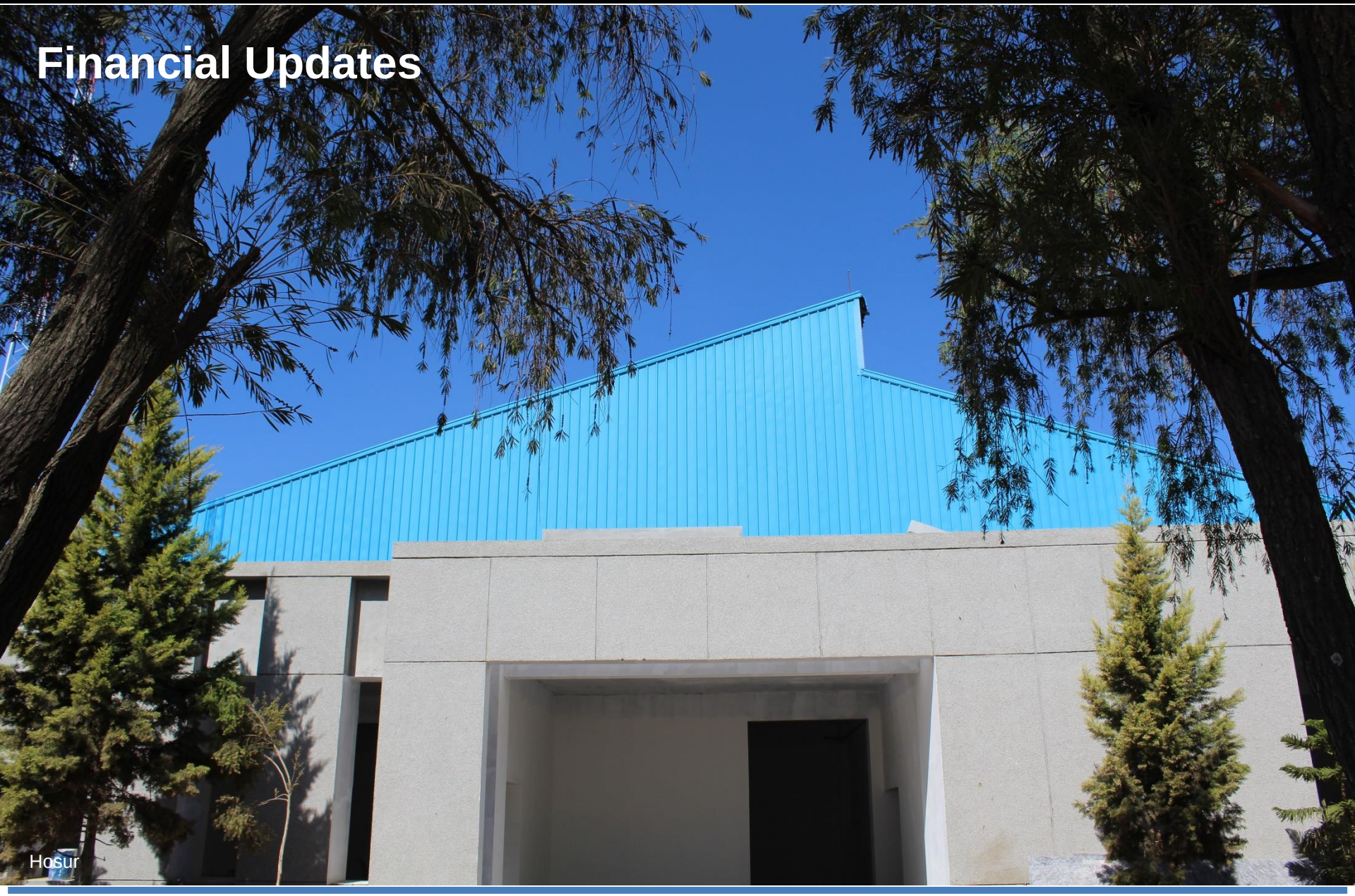

Key Financial Trend : Q/E June 2017 vs. June 2018

Figures in INR Lacs

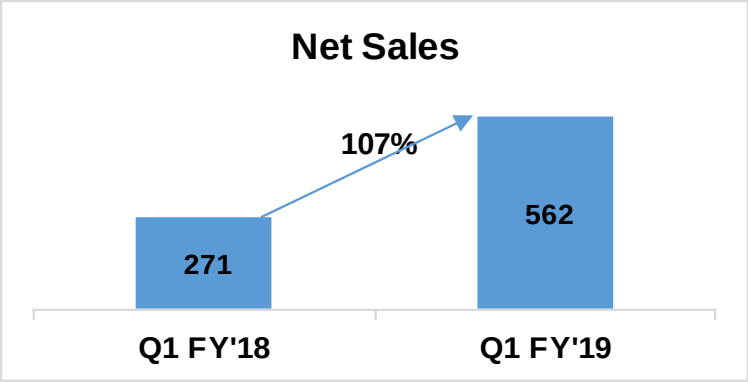

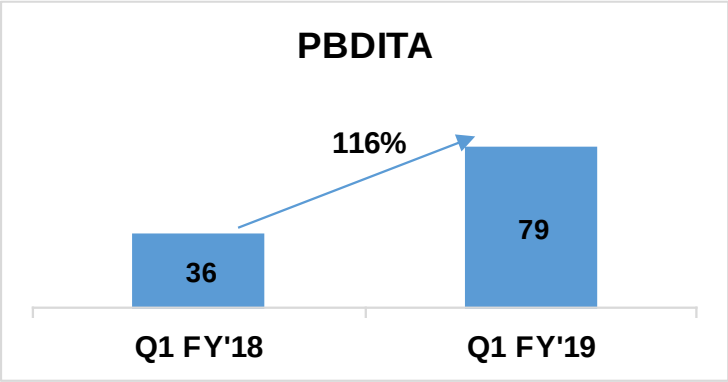

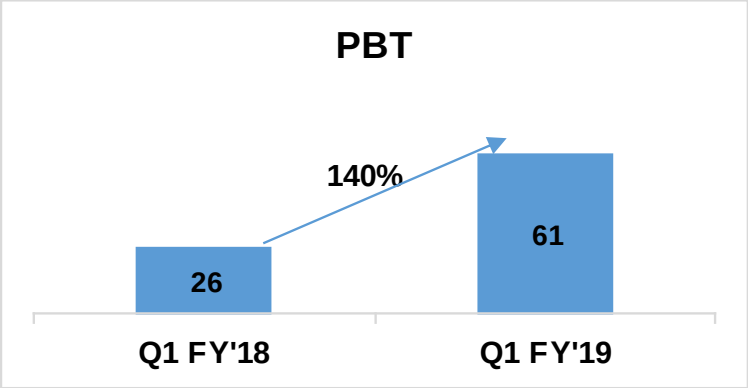

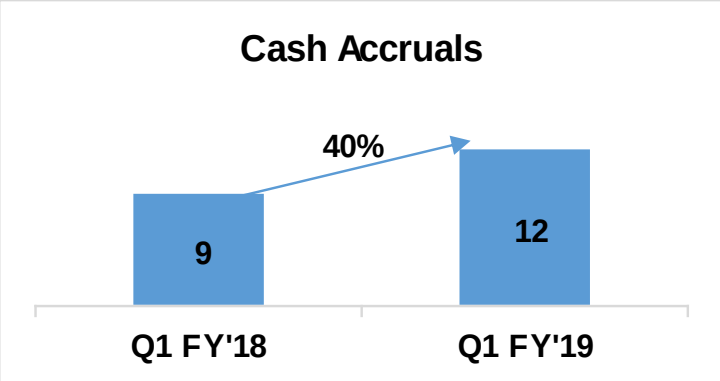

Cash Accruals: PAT+ Depreciation

Financial Results – Q1 FY'19

Figures in INR Lacs

Particulars	2017-18 12M	2018-19 Q1	2017-18 Q1	2017-18 Q4	%Growth Q1 FY'19 Vs Q1 FY'18	%Growth Q1 FY'19 Vs Q4 FY'18
Total Net Sales	1,738.1	562.2	271.4	596.7	107.2%	-5.8%
PBDITA	245.7	78.6	36.3	90.8	116.4%	-13.5%
Operating Margin	204.3	67.0	27.9	76.4	140.0%	-12.3%
PBT	186.1	61.3	25.6	69.7	139.7%	-12.1%
PAT	125.3	41.3	17.2	46.9	139.7%	-12.1%
Cash Accruals	166.7	12.0	8.6	14.9	40.1%	-19.6%
PBDITA Margin (%)	14.1%	14.0%	13.4%	15.2%	0.6%	-1.2%
Operating Margin (%)	11.8%	11.9%	10.3%	12.8%	1.6%	-0.9%
PBT (%)	10.7%	10.9%	9.4%	11.7%	1.5%	-0.8%
PAT (%)	7.2%	7.3%	6.3%	7.9%	1.0%	-0.5%
Cash Accruals (%)	9.6%	2.1%	3.2%	2.5%	-1.0%	-0.4%

Cash Accruals: PAT+ Depreciation

Contributing to Society

Almost 550 patients were screened and treated during a **Multi-specialty Health Check-up Camp** in village Faizpur, Yamuna Nagar. 13 women were also operated for hernioplasty, gall stone and hysterectomy problems

25 female inmates successfully completed their one month training in **"Soft toys Making"** in District Prison, Yamuna Nagar

Initiated an awareness session on "**Menstrual Hygiene**" among rural women and adolescents girls and distributed free sanitary napkins to all.

68 inmates successfully completed their "Basic Training in **Computer Operations"** in District Prison, Gurgaon

Planted 500 saplings on occasion of World Environment Day.

Other Achievements made in Q1 FY'19:

Environment: Sensitized beneficiaries on waste management by installing dustbins in Govt. schools and conducted cleanliness drives on occasion of World Earth Day.

Education: Inaugurated "**Jamna Computer Learning Center"** in JSR to train rural youths in basic computer course.

Sports: Started "**Archery Nursery**" to train 30 young children in Govt. schools in Jamshedpur by appointing an expert.

Community Outreach: Facilitated potable water to more than 5000 community people in Delhi, JSR & MLP locations.

Forward Looking Statement

This presentation is made to enable investors to comprehend our prospects and take informed investment decisions. This presentation may contain certain forward looking statements within the meaning of applicable laws and regulations. We cannot guarantee that these forward-looking statements will be realized, although we believe we have been prudent in assumptions. The achievement of results is subject to risks, uncertainties and even inaccurate assumptions. Should known or unknown risks or uncertainties materialize, or should underlying assumptions prove inaccurate, actual results could vary materially from those anticipated, estimated or projected. Readers should bear this in mind. We undertake no obligation to publicly update any forward-looking statements, whether as a result of new information, future events or otherwise.

Thank You